# CL 5 x2 - Block

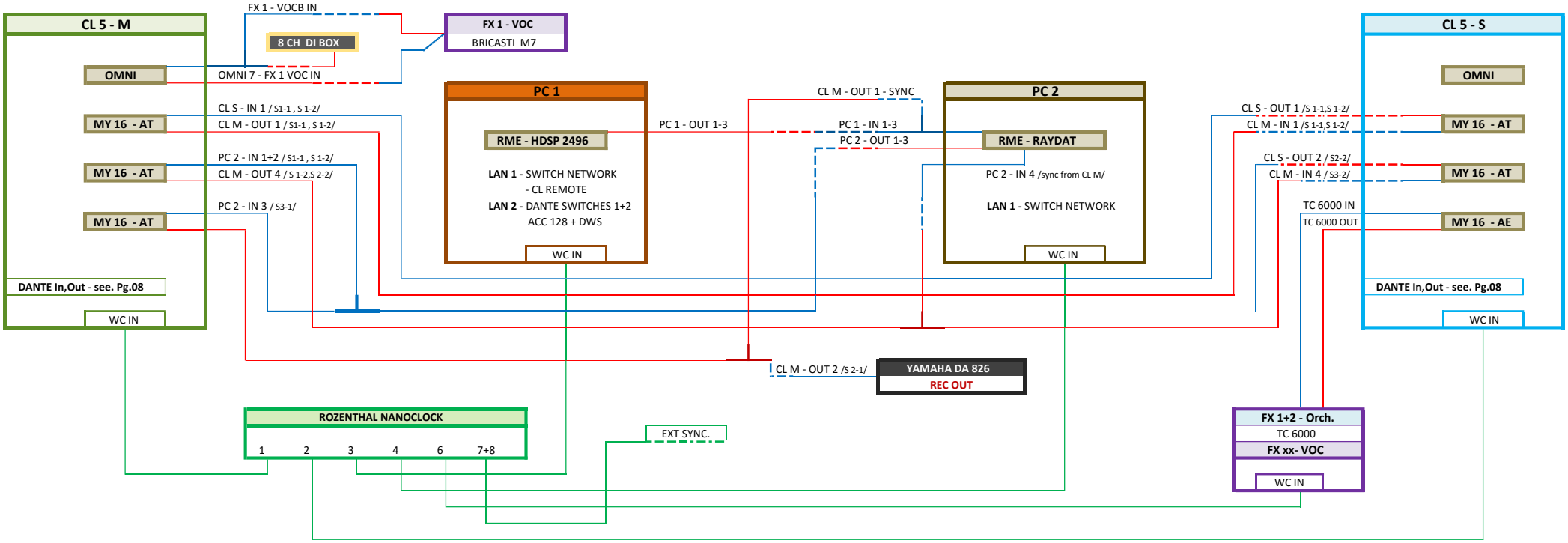
CL 5 - M
OMNI
MY 16 - AT
MY 16 - AT
MY 16 - AT
DANTE In,Out - see. Pg.08
WC IN
FX 1 - VOCB IN
8 CH DI BOX
OMNI 7 - FX 1 VOC IN
CL S - IN 1 / S1-1 , S 1-2/
CL M - OUT 1 / S1-1 , S 1-2/
PC 2 - IN 1+2 / S1-1 , S 1-2/
CL M - OUT 4 / S 1-2,S 2-2/
PC 2 - IN 3 / S3-1/
FX 1 - VOC
BRICASTI M7
PC 1
RME - HDSP 2496
LAN 1 - SWITCH NETWORK
- CL REMOTE
LAN 2 - DANTE SWITCHES 1+2
ACC 128 + DWS
WC IN
PC 1 - OUT 1-3
CL M - OUT 1 - SYNC
PC 1 - IN 1-3
PC 2 - OUT 1-3
PC 2
RME - RAYDAT
PC 2 - IN 4 /sync from CL M/
LAN 1 - SWITCH NETWORK
WC IN
CL S - OUT 1 /S 1-1,S 1-2/
CL M - IN 1 /S 1-1,S 1-2/
CL S - OUT 2 / S2-2/
CL M - IN 4 / S3-2/
TC 6000 IN
TC 6000 OUT
CL 5 - S
OMNI
MY 16 - AT
MY 16 - AT
MY 16 - AE
DANTE In,Out - see. Pg.08
WC IN
CL M - OUT 2 /S 2-1/
YAMAHA DA 826
REC OUT
ROZENTHAL NANOCLOCK
1
2
3
4
6
7+8
EXT SYNC.
FX 1+2 - Orch.
TC 6000
FX xx- VOC
WC IN